This is I.T. Co., Ltd.
1878 Moo 1 Soi Bearing 44 Sukhumvit 107 Rd.
T.Samrongnua A.Muang Samutprakarn Thailand 10270
Hot Line: 091-095-8123 Site: www.thisisit.co.th E-mail: sales@thisisit.co.th

RCB – COAXIAL BEAM TYPE LOAD CELL

Features

- High reliability and for versatile applications.
- Most suitable for use in material testing machines.
- Ample achievements in the sale and Low costs.
- Wide capacity ranges (50N to 5kN).
- Complete with a Load Button for compression use.
- Accuracy class: 0.15%.



Specifications

Safe Overload	150%RC
Rated Output	1.5mV/V±1%
Nonlinearity	0.15% RO
Hysteresis	0.15% RO
Repeatability	0.1% RO
Excitation Voltage	10V (or less)
Safe Excitation Voltage	15V
Input Resistance	350Ω
Output Resistance	350Ω
Compensated Temp.Range	-10 to 60℃
Safe Temp.Range	-30 to 80℃
Temp.Effect on Zero	0.01%RO/℃
Temp.Effect on Output	0.01%/℃
Connector (on body)	Receptacle / PRC03-21A10-7F
Attached cable	L-A-5

This is I.T. Co., Ltd.
1878 Moo 1 Soi Bearing 44 Sukhumvit 107 Rd.
T.Samrongnua A.Muang Samutprakarn Thailand 10270
Hot Line: 091-095-8123 Site: www.thisisit.co.th E-mail: sales@thisisit.co.th

Appearance Dimensions

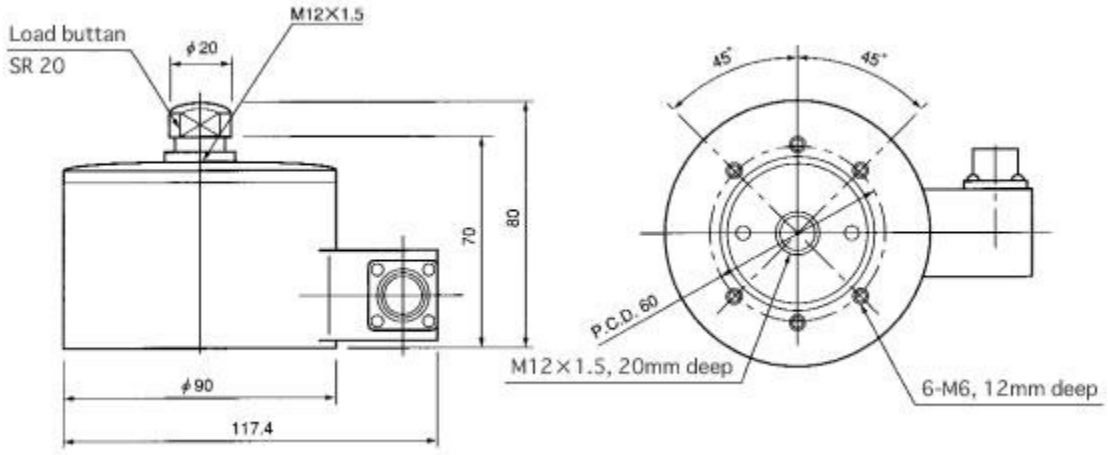

Model and Capacity / Dimension / etc. (unit : mm)

Model	Capacity	Natural frequency	Weight
RCB-50N	50N	0.3kHz	2.0kg
RCB-100N	100N	0.6kHz	2.1kg
RCB-200N	200N	0.9kHz	2.1kg
RCB-500N	500N	1.3kHz	2.1kg
RCB-1KN	1kN	1.9kHz	2.1kg
RCB-2KN	2kN	2.5kHz	2.3kg
RCB-5KN	5kN	4.7kHz	2.3kg

- REMARKS: Load cells of this Model can also be applied to a tension use although Model RCB load cells of standard version are supplied with a calibration sheet treating data to compression direction only. We can say from our back data of this Model that its tension sensitivity and compression sensitivity are almost the same each other, namely, within 0.2%, but we can willingly effect a tension load test to this Model whenever necessary on extra cost.