This is I.T. Co., Ltd.
1878 Moo 1 Soi Bearing 44 Sukhumvit 107 Rd.
T.Samrongnua A.Muang Samutprakarn Thailand 10270
Hot Line: 091-095-8123 Site: www.thisisit.co.th E-mail: sales@thisisit.co.th

# SHE-U – SHEAR BEAM TYPE AND WATER PROOF LOAD CELL

## Features



- Perfectly coping with water proof requirement (JIS C 0920 No. 7 Class). Immersion-proof. Can be put into underwater applications.
- All stainless construction (SUS630).
- Supplied with an inspection data sheet in both tension and compression direction.
- Easy to treat because of its larger freedom in the mounting.
- Excellent in deflection proof and fatigue proof features.
- Accuracy class : 0.05%

## Specifications

| | |
|---|---|
| **Safe Overload** | 150%RC |
| **Rated Output** | 2mV/V±1% |
| **Nonlinearity** | 0.05% RO |
| **Hysteresis** | 0.1% RO |
| **Repeatability** | 0.05% RO |
| **Excitation Voltage** | 12V (or less) |
| **Safe Excitation Voltage** | 20V |
| **Input Resistance** | 350Ω |
| **Output Resistance** | 350Ω |
| **Compensated Temp.Range** | -10 to 60℃ |
| **Safe Temp.Range** | -30 to 80℃ |
| **Temp.Effect on Zero** | 0.005%RO/℃ |
| **Temp.Effect on Output** | 0.01%/℃ |
| **Connector (on body)** | Φ9.4mm-4wire shielded cable, length: 5m |

This is I.T. Co., Ltd.
1878 Moo 1 Soi Bearing 44 Sukhumvit 107 Rd.
T.Samrongnua A.Muang Samutprakarn Thailand 10270
Hot Line: 091-095-8123 Site: www.thisisit.co.th E-mail: sales@thisisit.co.th

## Appearance Dimensions

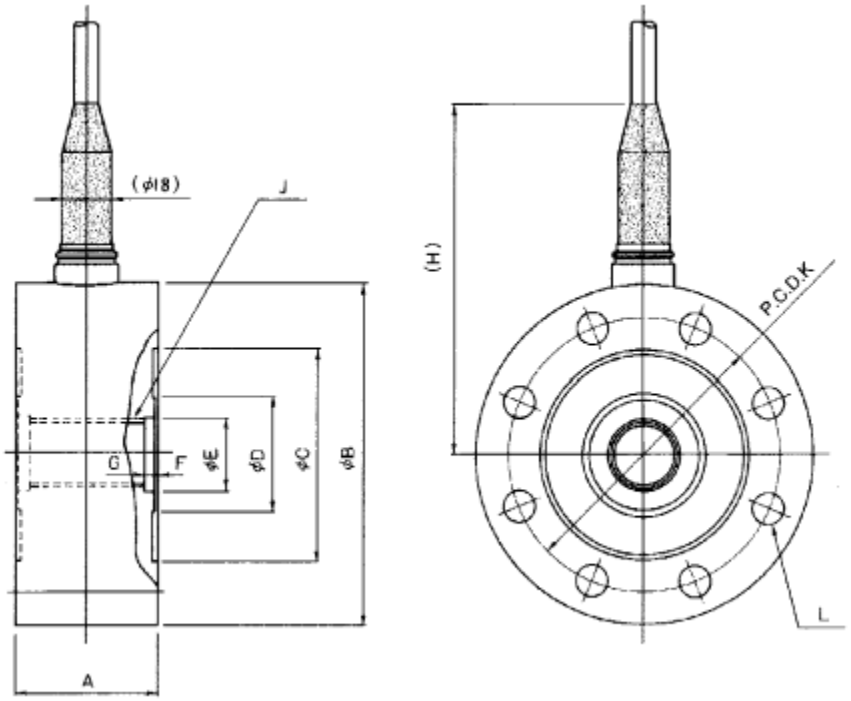


Model and Capacity / Dimension / etc. (unit : mm)

| Model | Capacity | A | B | C | D | E | F/G | J | K | L | Natural frequency | Weight |
|---|---|---|---|---|---|---|---|---|---|---|---|---|
| SHE-5KNU | 5kN | 40 | 105 | 65 | 35 | 20 | 1/3 | M18*1.5 | 85 | 8-Φ9 | 3.5kHz | 2.0kg |
| SHE-10KNU | 10kN | 40 | 105 | 65 | 35 | 20 | 1/3 | M18*1.5 | 85 | 8-Φ9 | 5.0kHz | 2.0kg |
| SHE-20KNU | 20kN | 40 | 105 | 65 | 35 | 20 | 1/3 | M18*1.5 | 85 | 8-Φ9 | 7.6kHz | 2.0kg |
| SHE-50KNU | 50kN | 50 | 120 | 74 | 40 | 26 | 1/4 | M24*1.5 | 95 | 8-Φ11 | 8.8kHz | 3.5kg |
| SHE-100KNU | 100kN | 65 | 160 | 100 | 60 | 40 | 1/5 | M36*2 | 130 | 8-Φ18 | 7.0kHz | 8.3kg |
| SHE-200KNU | 200kN | 80 | 220 | 140 | 80 | 55 | 1/5 | M50*2 | 180 | 8-Φ26 | 5.6kHz | 20kg |

- The clearance tolerance of "E" comes to "H7".