NO	DATE	ZONE	REVISION	CO'T	SIGN
⚠					

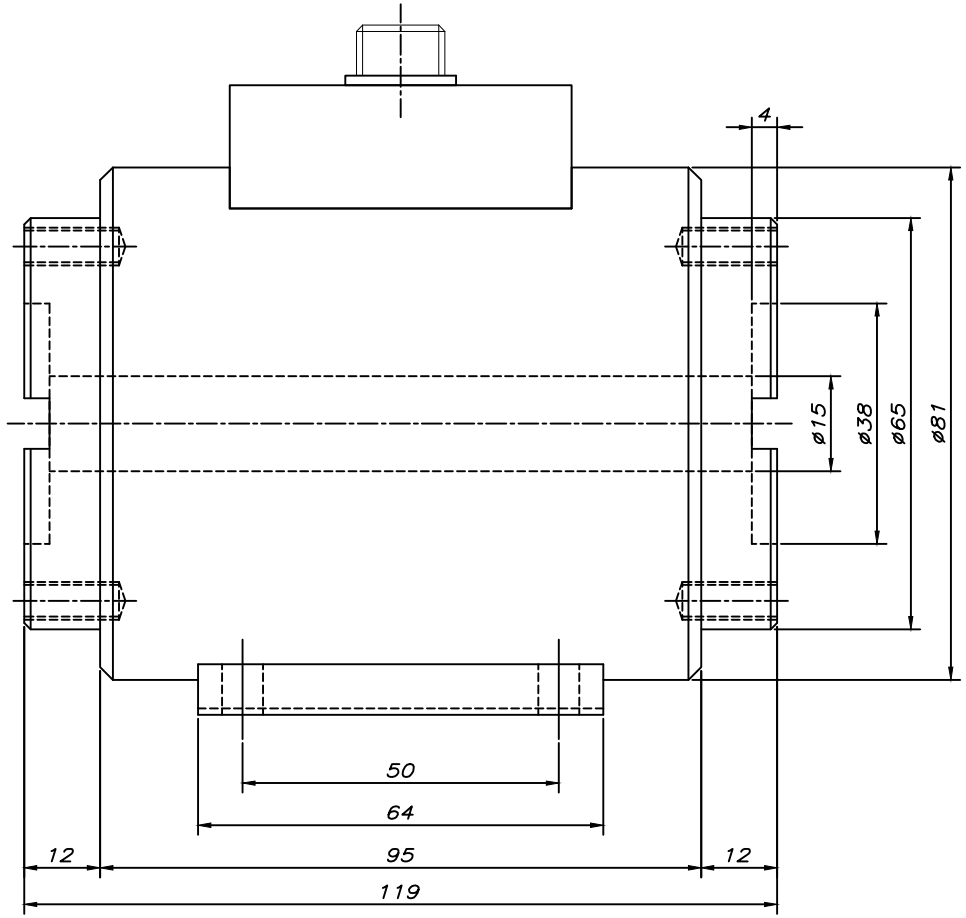

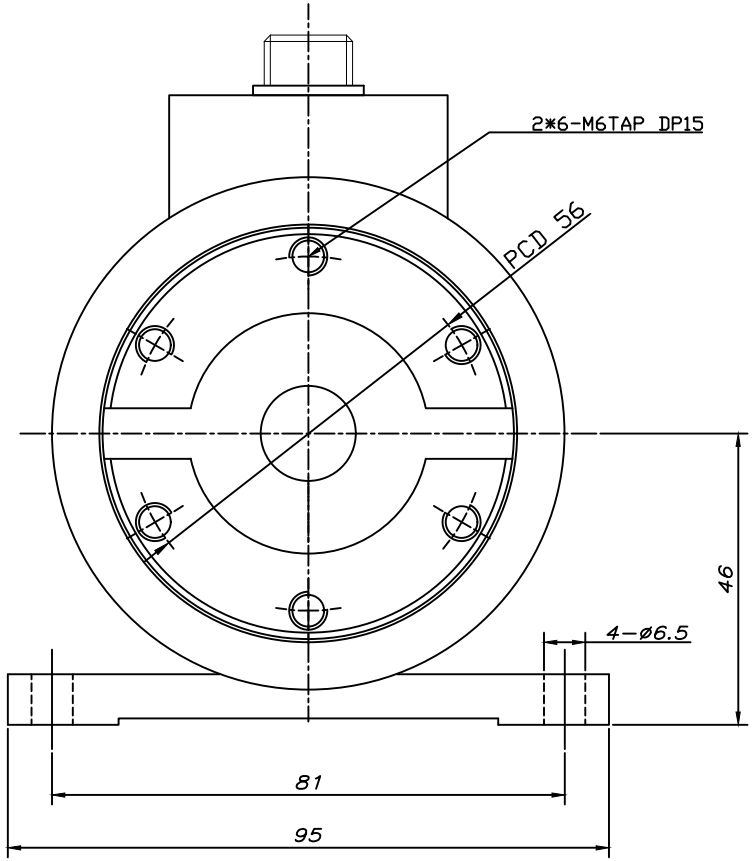

NO	DESCRIPTION	MATERIAL	HEART TREAT	Q'TY	DIMENSIONS	REMARK
1						

CHAMFER: ☐ C 0.1 ☐ C 0.3 ■ C 0.5 ☐ C 1	SCALE 1 : 1	ANGLE 1st 3rd	DESCRIPTION TORQUE SENSOR
TOLERANCE LIMITS: ■ MM ☐ INCH	DRAWN BY JJS 2017.07.06	PLANNED BY / CHECKED BY / APPROVED BY	MODEL TRE34-5K
0. ±0.1 / 0.0 ±0.05 / 0.00 ±0.01 / 0.000 ±0.002 — 0.0 ±0.04 / 0.00 ±0.02 / 0.000 ±0.004 / 0.0000 ±0.0002	DACELL TEL 043-260-2242 FAX 043-260-2245		ORDER. / ORDER DWG. NO
			DWG NO TRE34-1A-5K / SHEET